used for: D-SUB FILTER

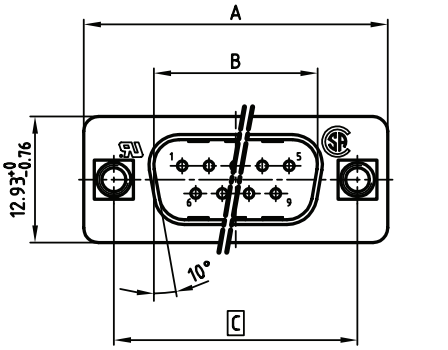

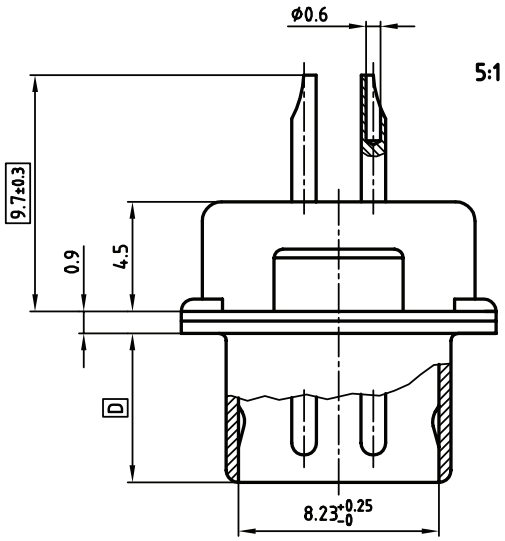

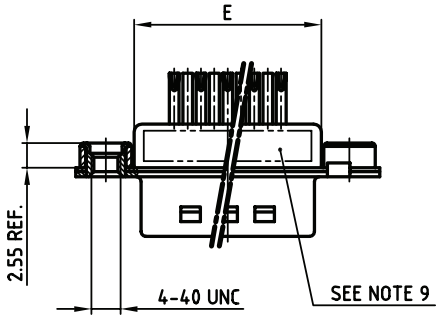

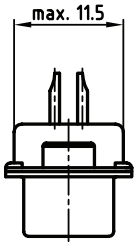

NOTES:

1. METALSHELLS: STEEL; min. 320µ" TIN
2. INSULATORS: PBT GF UL 94 V-0, BLACK
3. CONTACTS: COPPER ALLOY
   PLATING: min. 8µ" HARD GOLD OVER min. 50µ" NICKEL
   SOLDER CUP ACCEPTS CABLE AWG 26
4. THREADED INSERT: COPPER ALLOY; min. 200µ" TIN over 80µ" NICKEL
5. COLLAR: COPPER ALLOY; min. 200µ" TIN over 80µ" NICKEL
6. CAPACITANCE: 830pF ±20%
7. DIELECTRIC WITHSTANDING VOLTAGE: 424 VDC
8. MAXIMUM TORQUE VALUE FOR THREAD: 6" LBS
9. CONNECTOR IS PART MARKED: PART-NO. CONEC Y/WW
10. [ ] = CRITICAL DIMENSION

POS.	A -0.76	B +0.25	C	D -0.3	max. E	PART-NO.
9	31.19	16.79	25.00 +0.12 -0.13	6.12	19.60	**241A11800X**
15	39.52	25.12	33.30 +0.15 -0.1	6.12	27.90	**241A11810X**
25	53.42	38.84	47.04 ±0.13	5.99	41.60	**241A11820X**
37	69.70	55.30	63.50 ±0.13	5.99	58.00	**241A11830X**

APPROVAL # FREIGABE # DEBLOCAGE # AUTOR/ZACION # APPROVAL

CUSTOMER APPROVAL DATE:

NAME: TITLE:

COMPANY NAME:

APPROVAL # FREIGABE # DEBLOCAGE # AUTOR/ZACION # APPROVAL

THIS DRAWING MAY NOT BE COPIED OR REPRODUCED IN ANY WAY, AND MAY NOT BE PASSED ON TO A THIRD PARTY WITHOUT WRITTEN PERMISSION. OWNERSHIP AND COPYRIGHT OF CONEC GmbH

DO NOT ALTER CAD DRAWING BY HAND

rev.	description	date	name

tolerance

2002	date	name
drawn	24.10.	Parei
appd.	24.10.	Kühle
norm	DIN 41652	
d-old		

CONEC®

scale: 2:1 (5:1)

material: SEE NOTES

title:

D-SUB FILTER MALE

9-37pos. SOLDER CUP
with threaded insert

dwg no: AutoCAD 2000 DIN-A 3

24K1A331

sh: 1/1

part no: SEE TABLE