SIZE C 2296395 REV X

REVISIONS				
ZONE	LTR	DESCRIPTION	DATE	APPROVED
	F	REPLACES REV E DATED 21APR67 WITH CHANGE PER RD 2296395-F	16 OCT 1968	71-56331 10-9-68
	-	UPDATED APPL BLK	23 Aug 1967	
	G	RD2296395-G	21 NOV 1970	71-56332 11-1-70

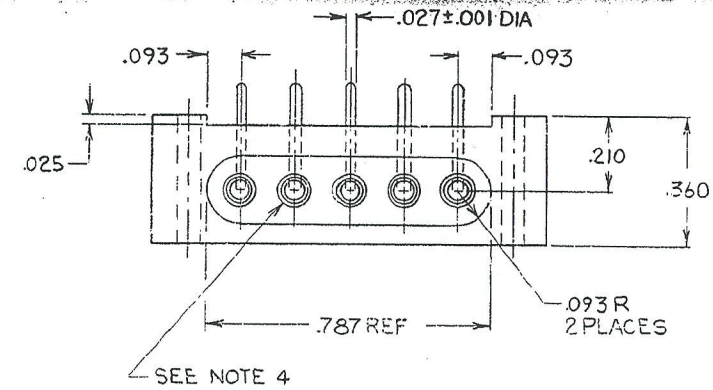

SUGGESTED SOURCE OF SUPPLY:
MASTERITE INC., INC.
INGLEWOOD, CALIF.
CODE IDENT NO. 05041

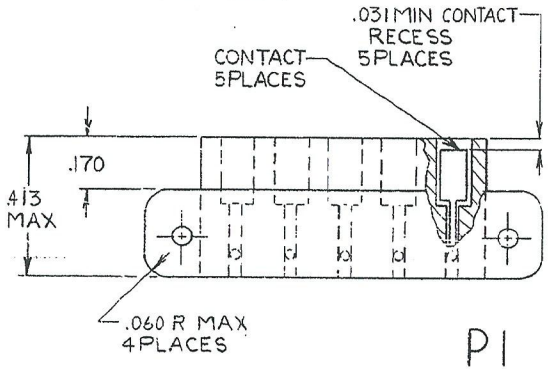

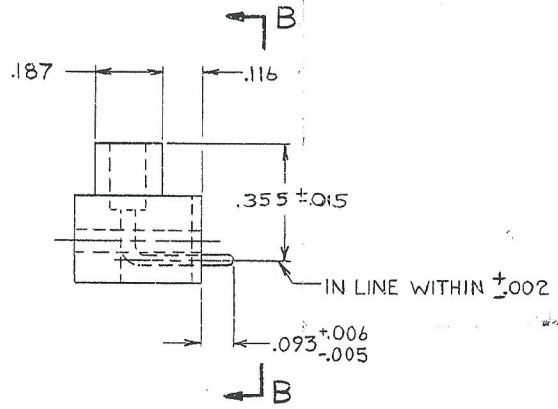

P1

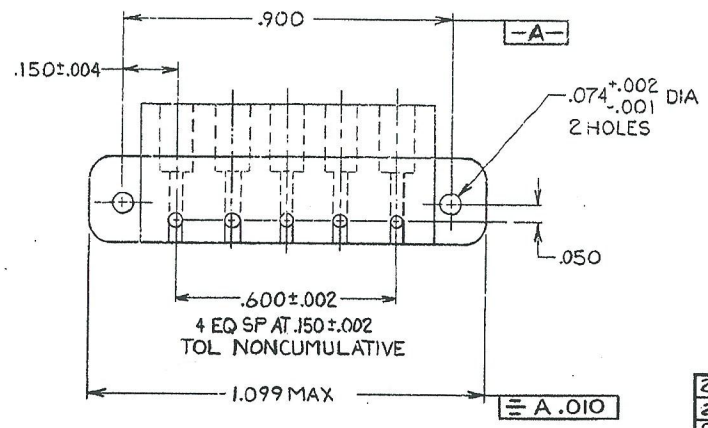

VIEW B-B

NOTES:

1. INTERPRET DRAWING IN ACCORDANCE WITH THE STANDARDS SPECIFIED IN MIL-D-70327
2. CONNECTOR SHALL MEET ALL REQUIREMENTS OF MIL-J-6751 UNLESS OTHERWISE SPECIFIED
3. ———
4. INDIVIDUAL CONTACTS SHALL ACCEPT TEST PLUG TIPS OF .080 ±.001 DIA
5. VOLTAGE RATING: 1000V RMS BETWEEN CONTACTS
6. INITIAL MILLIVOLT READINGS SHALL CONFORM WITH MIL-J-6751
7. WITHDRAWAL TEST FORCES PER MIL-J-6751 EXCEPT FORCE SHALL BE 3.0 LBS. MAX INSERTION AND 8 OUNCES MIN WITHDRAWAL WHEN USING .080 TEST PROD. OF HARDENED STEEL POLISHED
8. FINISH 125√ OR AS ROLLED OR MOLDED
9. MARK DWG NO., P NO., REV LETTER TO WHICH PART IS MANUFACTURED AND MANUFACTURER'S SYMBOL PER MIL-STD-130. FOR P NO., REV LTR SEE TABLE
10. INCLUSION ON THE MILITARY QUALIFIED PRODUCTS LIST IS NOT A REQUIREMENT OF THIS DWG
11. MATERIAL:
    BODY: GLASS FIBRE FILLED DIALLYL PATHALATE PER MIL-M-14, TYPE SDG OR TYPE SDG-F, GREEN COLOR
    CONTACTS: MAY BE EITHER (A) ONE PIECE DESIGN OR (B) TWO PIECE DESIGN
    (A) ONE PIECE DESIGN: SHALL BE SPRING TEMPER PHOSPHOR BRONZE PER QQ-P-330, COMP. A, GOLD PLATE PER MIL-G-45204, TYPE 2, .000030

NOTES CONTINUED:

MINIMUM THICKNESS OVER COPPER PLATE PER MIL-C-14550, .00001 MINIMUM THICK

(B) TWO PIECE DESIGN: CONTACT BODY SHALL BE BRASS PER QQ-B-626 COMP. 21, 22, OR 24, ½ HARD TEMPER; PRESSURE CLIP SHALL BE BERYLLIUM COPPER PER QQ-C-533, ALLOY 172, ¼ HARD TEMPER. BOTH PARTS TO BE GOLD PLATED PER MIL-G-45204, TYPE 2. .000030 MINIMUM THICKNESS OVER COPPER PLATE PER MIL-C-14550, .00001 MINIMUM THICK

REV STATUS	
P NO.	LTR
1	G

NEXT ASSY	USED ON
2805000	CONTROLLER
2805401	MK26MOD0
2120320	MK 80 FC
	DL2661682
	DL2661672
	MK 492
2648600	MK 84
	MK452
2296590	MK 84 FCS

APPLICATION

UNLESS OTHERWISE SPECIFIED DIMENSIONS ARE IN INCHES—
TOLERANCES ON:
DECIMALS ±.005
ANGLES ± ——
ALL SURFACES √
MATERIAL—
SEE NOTE 11

GENERAL ELECTRIC
ORDNANCE DEPT LOC PITTSFIELD

SIGNATURES		DATE
DRAWN	D. MacFARLANE	16JAN61
CHECKED	A. HUSKINS	5APR61
ISSUED	7 APR 61	
ENGRG	J.G. ADAMS	6MAY66

NOW-61-0136

APPROVED FOR SPECIAL PROJECTS OFFICE
C.W. Fitch 12/2/68
BY DIRECTION DIR SPC PROJ

DEPARTMENT OF THE NAVY
SPECIAL PROJECTS OFFICE
WASHINGTON, D. C. 20360

TEST POINT BLOCK

SPECIFICATION CONTROL DRAWING

SIZE	CODE IDENT NO.	
C	10001	2296395

SCALE 4/1 SHEET ——

P242 P187 P186 P183 P181 P180 P174 P173 P170 P210 P192 P191 P188 P175 P24 P217 P110 P112 P65 P22 P13 P97 P64 P58B P58A P57 P58 P172 P227 P199 P268

SIZE C 2296395 REV X

FN-909-F (12-66) PRINTED IN U.S.A.

000130 2 J. HARGRAVE (DR) 1