Product data sheet
Automation technology - Sensors and actuators

Product description	**M12 Female cable connector, Contacts: 4, 6.0-8.0 mm, shieldable, screw clamp, IP67, UL**
-	**-**
Area	**M12-A series 713**
Part no.	**99 1430 812 04**

Illustration

Scale drawing

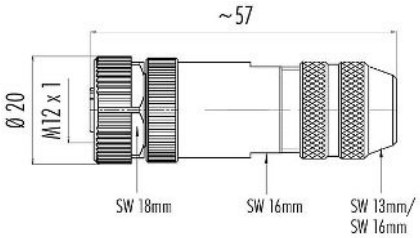

Contact arrangement (Plug-in side)

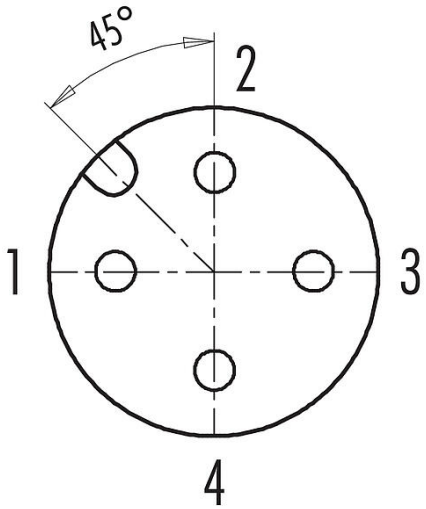

You can find the component part drawing and assembly instructions on the next page.

Technical data

General features

Part no.	**99 1430 812 04**
Connector design	Female cable connector
Type standard	DIN EN 61076-2-101
Version	Connector socket straight
Connector locking system	screw
Termination	screw clamp
Degree of protection	IP67
Cross-sectional area	max. 0.75 mm² / AWG 18
Cable outlet	6.0-8.0 mm
Temperature range from/to	-40 °C / 85 °C
Mechanical operation	> 100 Mating cycles
Weight (g)	45.41
Customs tariff number	85369010
Country of Origin	DE

Electrical parameters

Rated voltage	250 V
Rated impulse voltage	2500 V
Rated current	4 A (3 A UL)
Insulation resistance	> 10⍰ Ω

Product data sheet
Automation technology - Sensors and actuators

Product description	**M12 Female cable connector, Contacts: 4, 6.0-8.0 mm, shieldable, screw clamp, IP67, UL**
-	**-**
Area	**M12-A series 713**
Part no.	**99 1430 812 04**

Pollution degree	3
Overvoltage category	II
Insulating material group	III
EMC compliance	shieldable
Shield connection	Shielding ring

Material

Housing material	Zinc die-cast nickel-plated
Contact body material	PA
Contact material	CuZn (brass)
Contact plating	Au (gold)
Locking material	Zinc die-cast nickel-plated
REACH SVHC	CAS 96-45-7 (Imidazolidine-2-thione) CAS 7439-92-1 (Lead)
SCIP number	dc136e59-2094-4394-afa8-e3372438a1d4

Authorization/approvals

Approvals	UL

Classifications

eCl@ss 11.1	27-44-01-02
ETIM 9.0	EC002635

Declarations of conformity

Low Voltage Directive	2014/35/EU (EN 60204-1:2018;EN 60529:1991)

Product data sheet

Automation technology - Sensors and actuators

Product description	**M12 Female cable connector, Contacts: 4, 6.0-8.0 mm, shieldable, screw clamp, IP67, UL**
-	**-**
Area	**M12-A series 713**
Part no.	**99 1430 812 04**

Assembly instructions

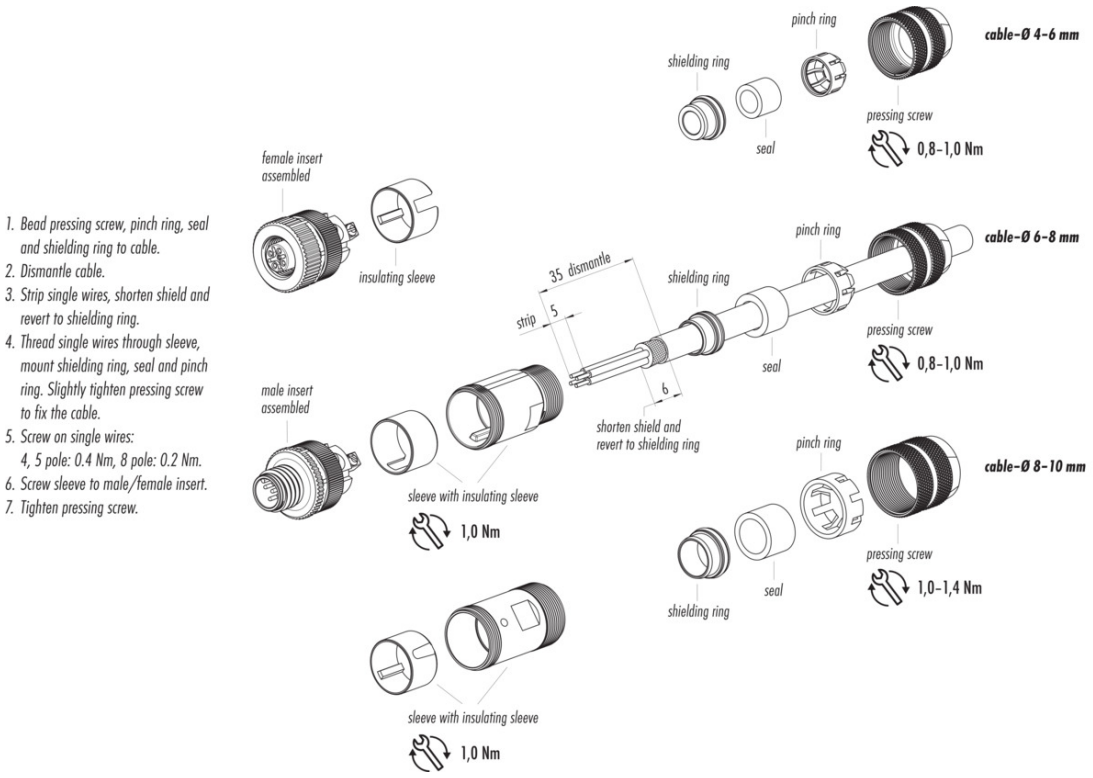

Component part drawing

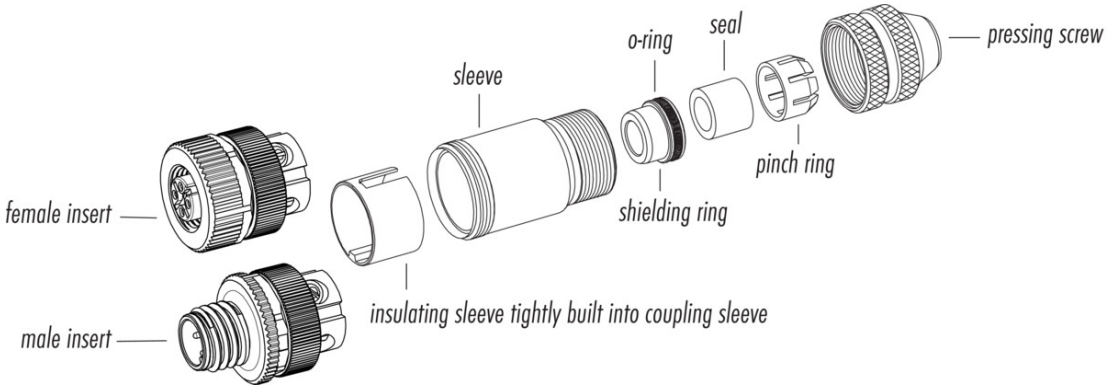

Date: 30.08.2023

Product description	**M12 Female cable connector, Contacts: 4, 6.0-8.0 mm, shieldable, screw clamp, IP67, UL**
-	**-**
Area	**M12-A series 713**
Part no.	**99 1430 812 04**

General Disclaim Notice

The connector must not be plugged or unplugged under load. Non-observance and improper use can result in personal injury.

The connectors have been developed for applications in plant engineering, control and electrical equipment construction. The user is responsible for checking whether the connectors can also be used in other areas of application.

To protect against unintentional opening of the connector, the thread between the housing and the connector head must be secured with a suitable cyanoacrylate adhesive when used in circuits with voltages dangerous to the touch. This does not apply to connectors used in SELV and PELV circuits according to IEC 61140 (EN 61140, VDE 0140-1).

Connectors which are used in circuits with voltages dangerous to the touch may only be installed and used by, or under the supervision of, persons with electrical engineering training, taking into account the applicable regulations and standards.

Plug connectors with enclosure protection IP67 and IP68 are not suitable for use under water. When used outdoors, the plug connectors must be protected separately against corrosion. For further information on the IP protection classes, please refer to the "Technical Information" download centre.

To lock the cable connector with the device connector, the threaded ring is tightened "hand-tight" (approx. 60 cNm).