Product data sheet
Automation technology - Sensors and actuators

Product description	**M12 Male cable connector, Contacts: 5, 4.0-6.0 mm, unshielded, screw clamp, IP67, UL**
-	**-**
Area	**M12-A series 713**
Part no.	**99 0437 14 05**

Illustration

Scale drawing

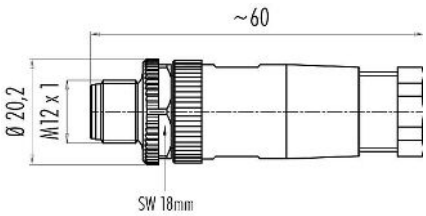

Contact arrangement (Plug-in side)

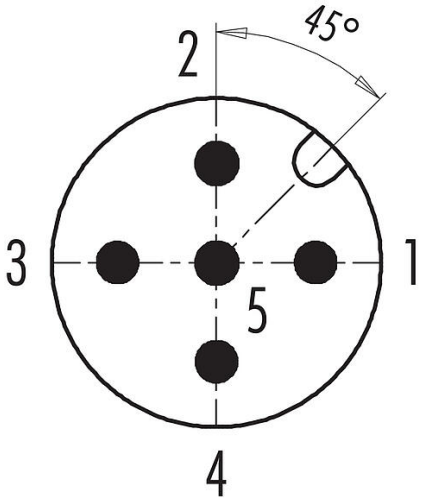

You can find the component part drawing and assembly instructions on the next page.

Technical data

General features

Part no.	**99 0437 14 05**
Connector design	Male cable connector
Type standard	DIN EN 61076-2-101
Version	Connector pin straight
Connector locking system	screw
Termination	screw clamp
Degree of protection	IP67
Cross-sectional area	max. 0.75 mm² / AWG 18
Cable outlet	4.0-6.0 mm
Temperature range from/to	-40 °C / 85 °C
Mechanical operation	> 50 Mating cycles
Weight (g)	21.44
Customs tariff number	85369010
Country of Origin	DE

Electrical parameters

Rated voltage	60 V
Rated impulse voltage	1500 V
Rated current	4 A (3 A UL)
Insulation resistance	> 10⁸ Ω
Pollution degree	3

Product description	**M12 Male cable connector, Contacts: 5, 4.0-6.0 mm, unshielded, screw clamp, IP67, UL**
-	**-**
Area	**M12-A series 713**
Part no.	**99 0437 14 05**

Overvoltage category	II
Insulating material group	III
EMC compliance	unshielded

Material

Housing material	PA
Contact body material	PA
Contact material	CuZn (brass)
Contact plating	CuSnZn (Optalloy)
Locking material	Zinc die-cast nickel-plated
REACH SVHC	CAS 96-45-7 (Imidazolidine-2-thione) CAS 7439-92-1 (Lead)
SCIP number	195937a4-ca55-46e6-90e3-558caad49afc

Authorization/approvals

Approvals	UL

Classifications

eCl@ss 11.1	27-44-01-02
ETIM 9.0	EC002635

Declarations of conformity

Low Voltage Directive	2014/35/EU (EN 60204-1:2018;EN 60529:1991)

Product data sheet

Automation technology - Sensors and actuators

Product description	**M12 Male cable connector, Contacts: 5, 4.0-6.0 mm, unshielded, screw clamp, IP67, UL**
-	**-**
Area	**M12-A series 713**
Part no.	**99 0437 14 05**

Assembly instructions

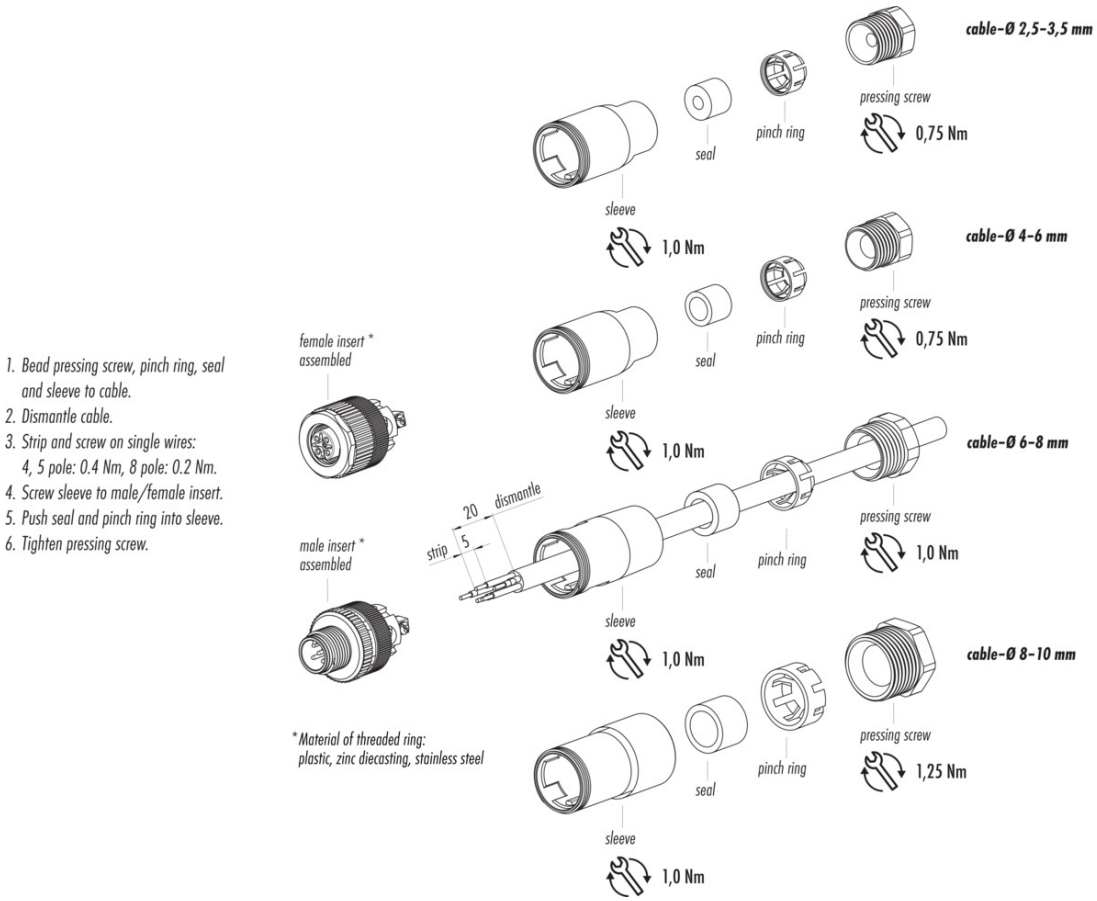

Date: 30.08.2023

Product data sheet

Automation technology - Sensors and actuators

Product description	**M12 Male cable connector, Contacts: 5, 4.0-6.0 mm, unshielded, screw clamp, IP67, UL**
-	**-**
Area	**M12-A series 713**
Part no.	**99 0437 14 05**

Component part drawing

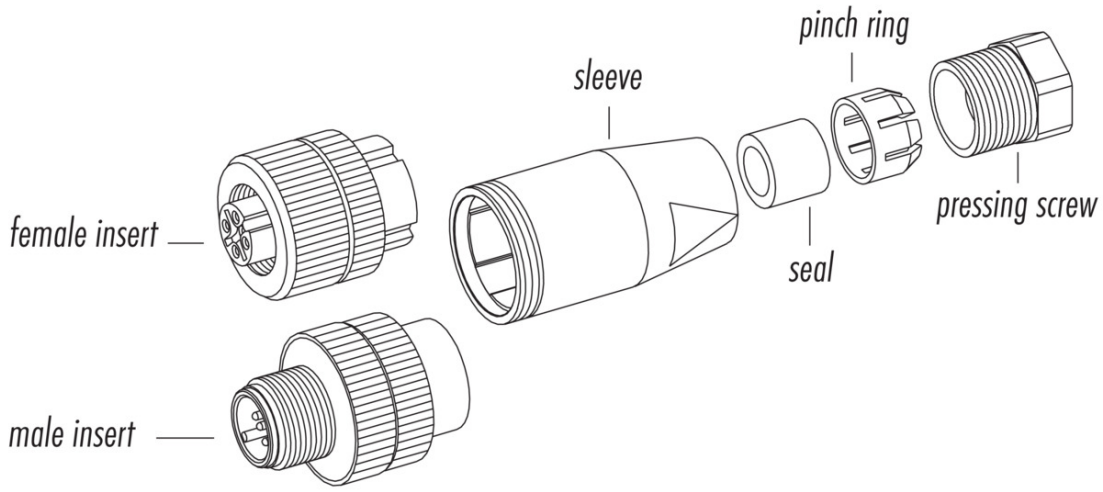

material of locking rings: plastic, zinc diecast, stainless steel

Date: 30.08.2023

Product data sheet

Automation technology - Sensors and actuators

Product description	**M12 Male cable connector, Contacts: 5, 4.0-6.0 mm, unshielded, screw clamp, IP67, UL**
-	**-**
Area	**M12-A series 713**
Part no.	**99 0437 14 05**

General Disclaim Notice

The connectors have been developed for applications in plant engineering, control and electrical equipment construction. The user is responsible for checking whether the connectors can also be used in other areas of application.

Plug connectors with enclosure protection IP67 and IP68 are not suitable for use under water. When used outdoors, the plug connectors must be protected separately against corrosion. For further information on the IP protection classes, please refer to the "Technical Information" download centre.

To lock the cable connector with the device connector, the threaded ring is tightened "hand-tight" (approx. 60 cNm).