Product	Female cable connector IP 67, short version	Pole	3 DIN
Area	M16 connectors IP 67 serie 423	Article number	99 5106 40 03

illustration

scale drawing

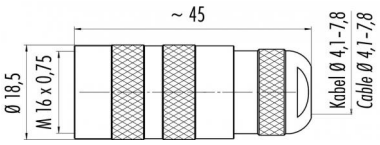

Contact Arrangement

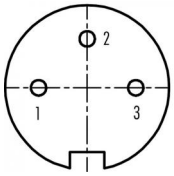

	X	Y
1	-3,50	0,00
2	0,00	3,50
3	3,50	0,00

You can find the item description and assembly instruction on the next page.

Technical data

Common values

Connector Design	Female cable connector
Connector locking system	Screw
Termination	solder
Wire gauge (mm)	0,75 mm²
Wire gauge (AWG)	20
Cable outlet	4 - 8 mm
Upper temperature	+95 °C
Lower temperature	-40 °C

Electrical values

Rated voltage	250 V
Rated impulse voltage	1500 V
Pollution degree	1
Overvoltage category	I
Material group	III
Rated current (40°C)	7 A
Volume resistivity	≤ 3 mΩ
EMV compliance	not shielded
Degree of protection	IP 67
Mechanical operation	>500 mating cycles

Material

Material of contact	CuSn (bronce)
Contact plating	Au (gold)
Material of contact body	PBT (UL 94 V-0)
Material of housing	CUZn (brass nickel plated)

Cable data

Contacts 3 DIN, female cable connector, short version, not shieldable, cable outlet 4-8 mm, gold plated contacts

Product	Female cable connector IP 67, short version		Pole	3 DIN
Area	M16 connectors IP 67	serie 423	Article number	99 5106 40 03

Item description

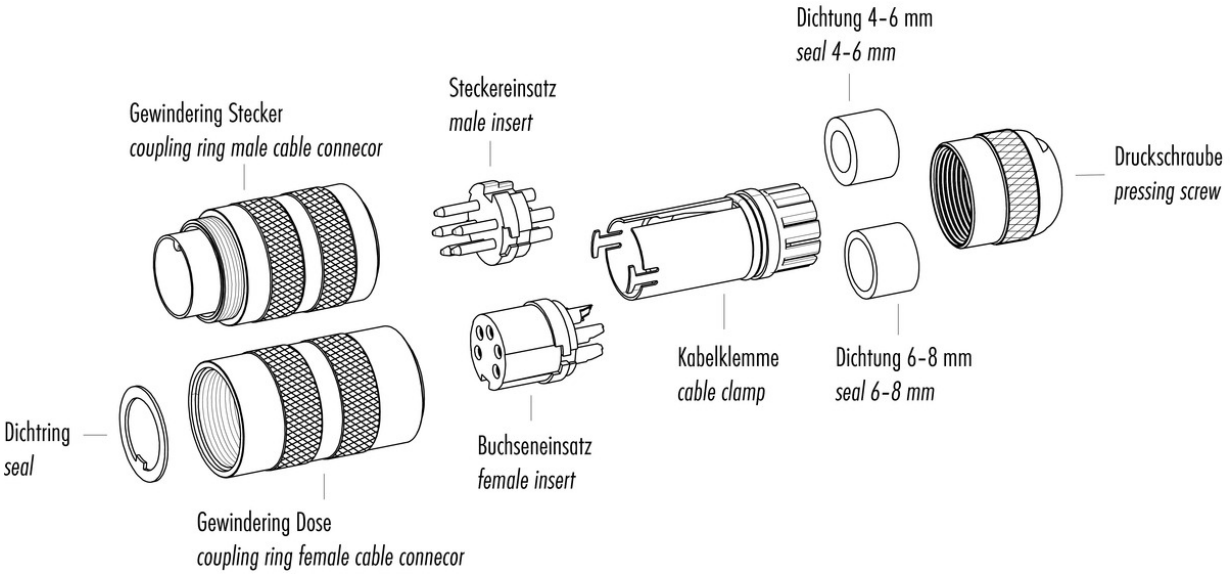

Installation instructions / Mounting cutout

Gerade Version
(Ausführung mit Schirmklemmring)
1. Druckschraube, Klemmkorb, Dichtung, Distanzhülse und ersten Schirmklemmring auffädeln.
2. Litzen abisolieren, Schirm aufweiten und zweiten Schirmklemmring auffädeln.
3. Litzen anlöten, Distanzhülse montieren, die beiden Klemmringe mit dem Schirm zusammenschieben und überstehenden Schirm abschneiden.
4. Übrige Teile gemäß Darstellung montieren.
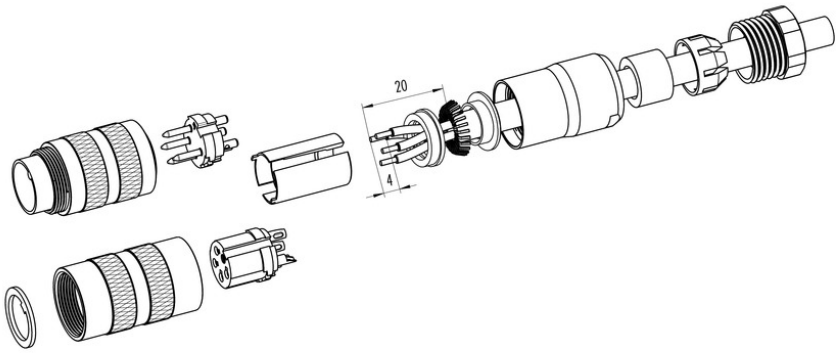
Straight version
(Version with shield clamping ring)
1. *Bead pressing screw, pinch ring, seal, distance shell and first shield clamping ring on cable.*
2. *Strip wires, widen shield and bead second shield clamping ring.*
3. *Solder wires, snap distance shell, push the two shield clamping rings together and cutt off projecting shielding braid.*
4. *Assemble remaining parts according to picture.*