Product	Female cable connector 360° EMI protected, shieldable	Pole	7
Area	M9 connectors IP 67 serie 712	Article number	99 0422 10 07

illustration

scale drawing

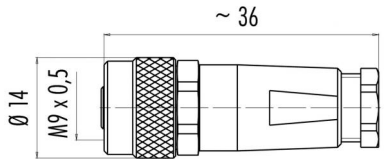

Contact Arrangement

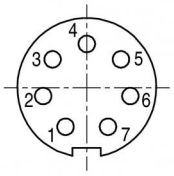

	X	Y
1	–0,90	–1,65
2	–1,85	–0,35
3	–1,45	1,20
4	0,00	1,85
5	1,45	1,20
6	1,85	–0,35
7	0,90	–1,65

You can find the item description on the next page.

Technical data

Common values

Connector Design	Female cable connector
Connector locking system	Screw
Termination	solder
Wire gauge (mm)	0,14 mm²
Wire gauge (AWG)	26
Cable outlet	3,5 - 5 mm
Upper temperature	+85 °C
Lower temperature	-40 °C

Electrical values

Rated voltage	125 V
Rated impulse voltage	1500 V
Pollution degree	1
Overvoltage category	II
Material group	III
Rated current (40°C)	1 A
Volume resistivity	≤ 3 mΩ
EMV compliance	shieldable
Degree of protection	IP 67
Mechanical operation	>500 mating cycles

Material

Material of contact	CuSn (bronce)
Contact plating	Au (gold)
Material of contact body	PA (UL 94 V-0)
Material of housing	CUZn (brass nickel plated)

Cable data

material housing	-
insulation single lead	-
single lead structure	-
conductor resistance	-

Contacts 7, Female cable connector 360° EMI protected, shieldable

Product	Female cable connector 360° EMI protected, shieldable	Pole	7
Area	M9 connectors IP 67 serie 712	Article number	99 0422 10 07
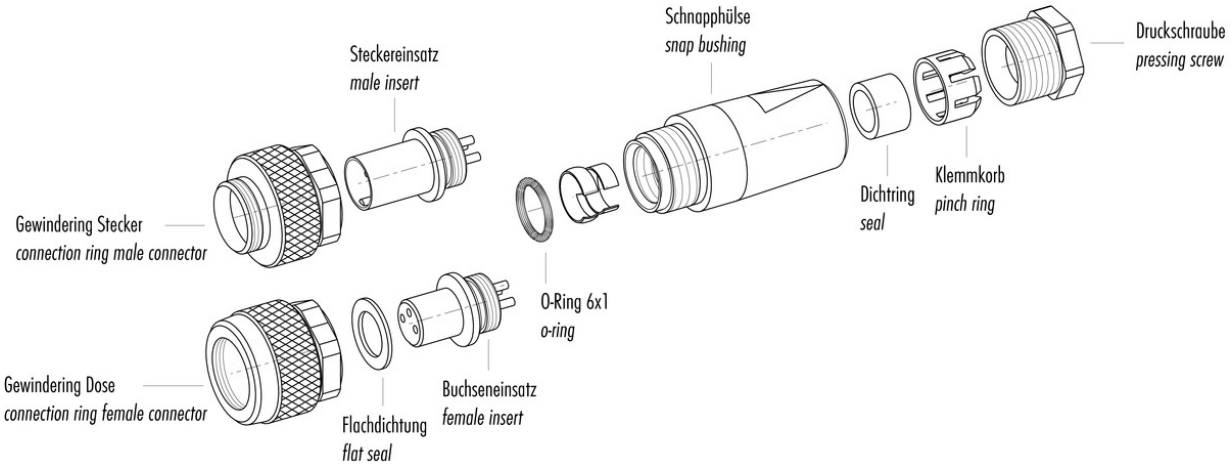
Item description