Product	Male angled cable connector moulded on cable	Pole	14
Area	M16 connectors IP 67 serie 425	Article number	79 6251 200 14

illustration

scale drawing

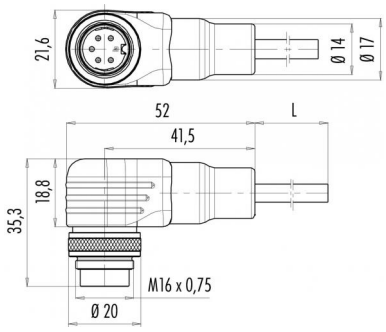

Contact Arrangement

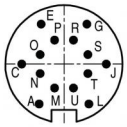

A braun0,5 mm²
C –
E schwarz
G rosa
J grün
L blau 0,5 mm²
M gebrückt mit A
N –
O violett
P weiß
R rot
S grau
T gelb
U gebrückt mit L

Technical data

Common values

Connector Design	Male angled cable connector
Connector locking system	Screw
Termination	solder, overmoulded on cable
Wire gauge (mm)	0,25/0,5 mm²
Wire gauge (AWG)	24/20
Cable outlet	-
Upper temperature	+70 °C
Lower temperature	-25 °C

Electrical values

Rated voltage	60 V
Rated impulse voltage	500 V
Pollution degree	1
Overvoltage category	I
Material group	III
Rated current (40°C)	3 A
Volume resistivity	≤ 3 mΩ
EMV compliance	not shielded
Degree of protection	IP 67
Mechanical operation	>500 mating cycles

Material

Material of contact	CuZn (brass)
Contact plating	Au (gold)
Material of contact body	PBT (UL 94 V-0)
Material of housing	PUR

Cable data

material housing	PUR
insulation single lead	PVC
single lead structure	32x0,1 63x0,1 mm
cable sheath Ø	8
bending radius cable fixed	80 mm
bending radius cable movable	120 mm
cable diameter	8

Contacts 14, cable 8 x 0,25, 2 x 0,5 mm², female cable connector