Product	Female socket, front fastened, with shielding sheet, dip solder	Pole	4
Area	M12 connectors D-Coding serie 825/876	Article number	09 3732 500 04

illustration

Conductor layout

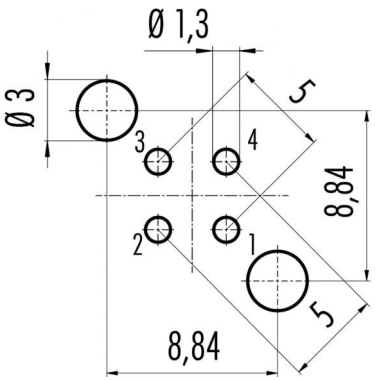

scale drawing

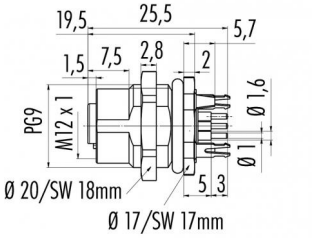

Sechskantmutter lose beigelegt
Hexagon nut enclosed loose

Leiterplattendicke: 1,6 mm
Thickness of PCB: 1,6 mm

You can find the assembly instruction on the next page.

Technical data

Common values

Connector Design	Female socket
Connector locking system	Screw
Termination	dip solder
Upper temperature	+85 °C
Lower temperature	-40 °C

Electrical values

Rated voltage	250 V
Rated impulse voltage	2500 V
Pollution degree	3
Overvoltage category	II
Material group	II
Volume resistivity	≤ 8 mΩ
EMV compliance	shielded
Degree of protection	IP 67
Mechanical operation	>100 mating cycles

Material

Material of contact	CuSn (bronce)
Contact plating	Sn (tin)
Material of contact body	PA
Material of housing	brass, zinc diecasting, nickel plated

Cable data

Fixing thread: PG 9, contacts: 4, female socket, front fastened, with shielding sheet, dip solder

Product	Female socket, front fastened, with shielding sheet, dip solder	Pole	4
Area	M12 connectors D-Coding serie 825/876	Article number	09 3732 500 04

Installation instructions / Mounting cutout

Mit Fläche als Verdrehschutz
With flats as anti-rotation device

Mit Durchgangsbohrung
With bore hole

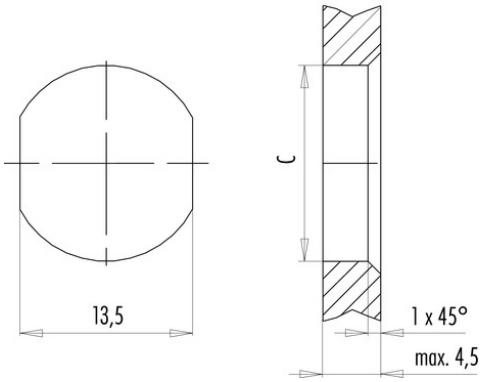

	C
PG 9	15,3
M16x1,5	16,1

Anzugsdrehmoment/*Tightening moment*

Metallgehäuse/*Metal housing*	6,25 Nm
Kunststoffgehäuse/*Plastic housing*	3,75 Nm