Product	Flanschdose, von vorn verschraubbar, mit Litzen	Pole	4+PE
Area	7/8 ´ ´ connectors serie 820/870	Article number	09 2450 100 05

illustration

scale drawing

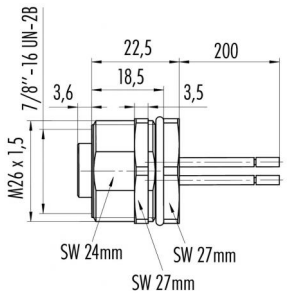

Contact Arrangement

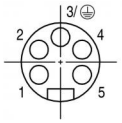

1 schwarz/*black*
2 blau/*blue*
PEgrün/gelb/*green/yellow*
4 braun/*brown*
5 weiß/*white*

You can find the assembly instruction on the next page.

Technical data

Common values

Wire gauge (mm)	0,82 mm²
Wire gauge (AWG)	18
Upper temperature	+85 °C
Lower temperature	-25 °C

Electrical values

Rated voltage	300 V
Rated impulse voltage	2500 V
Pollution degree	3
Overvoltage category	III
Material group	III
Rated current (40°C)	8 A
Volume resistivity	≤ 5 mΩ
Degree of protection	IP 67
Mechanical operation	>100 mating cycles

Material

Material of contact	CuZn (brass)
Contact plating	Au (gold)
Material of contact body	PUR (UL 94 HB)
Material of housing	brass, zinc diecasting, nickel plated

Cable data

material housing	-
insulation single lead	-
single lead structure	-
conductor resistance	-
bending radius cable fixed	-
bending radius cable movable	-
approval	UL

Polzahl: 4+PE, Flanschdose von vorn verschraubbar, mit Litzen und UL-Zulassung

Product	Flanschdose, von vorn verschraubbar, mit Litzen			Pole	4+PE
Area	7/8 ´ ´ connectors	serie 820/870		Article number	09 2450 100 05

Installation instructions / Mounting cutout

Mit Durchgangsbohrung/*With bore hole*

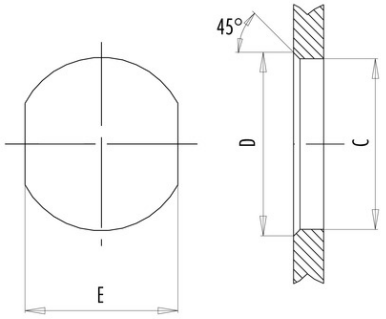

alternativ/*alternativ*

Mit Gewinde, einschraubbar/*With thread to screw in*

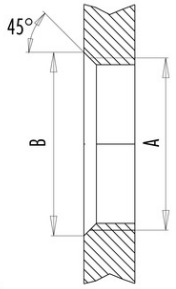

	A	B	C	D	E
PG11	PG11	20,2	18,7	20,2	17,0
PG13,5	PG13,5	22,0	20,5	22,0	18,8
M20x1,5	M20x1,5	21,6	20,1	21,6	17,8

Mit Durchgangsbohrung/*With bore hole*
von vorn verschraubbar/*front fastened*

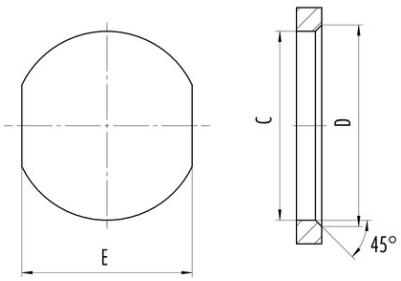

alternativ/*alternativ*

Mit Gewinde, einschraubbar/*With thread to screw in*

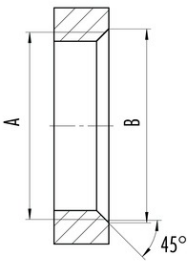

A	B	C	D	E
7/8-16UN-20	23	22,4	23,9	20,2
M26x1,5	27,3	26,2	27,7	24,2