Product	Female socket with flexible PCB, front fastened	Pole	7
Area	M16 connectors IP 40 serie 581/ 680/ 682	Article number	09 0328 65 07

illustration

scale drawing

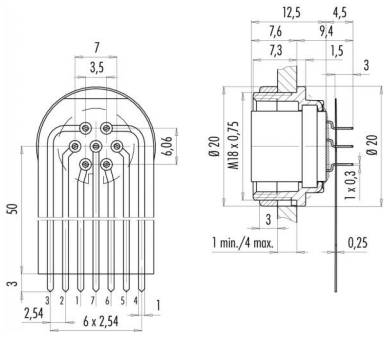

Contact Arrangement

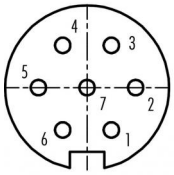

	X	Y
1	1,75	-3,03
2	3,50	0,00
3	1,75	3,03
4	-1,75	3,03
5	-3,50	0,00
6	-1,75	-3,03
7	0,00	0,00

You can find the assembly instruction on the next page.

Technical data

Common values

Connector Design	Female socket
Connector locking system	Screw
Termination	dip solder
Wire gauge (mm)	-
Wire gauge (AWG)	-
Upper temperature	+85 °C
Lower temperature	-40 °C

Electrical values

Rated voltage	125 V
Rated impulse voltage	800 V
Pollution degree	1
Overvoltage category	I
Material group	III
Rated current (40°C)	5 A
Volume resistivity	≤ 5 mΩ
EMV compliance	shielded
Degree of protection	IP 40
Mechanical operation	>500 mating cycles

Material

Material of contact	CuSn (bronce)
Contact plating	Ag (silver)
Material of contact body	PBT (UL 94 V-0)
Material of housing	zinc diecasting, nickel plated

Cable data

Contacts 7, female socket with flexible PCB, front fastened, silver plated contacts, silver plated contacts

Product	Female socket with flexible PCB, front fastened		Pole	7
Area	M16 connectors IP 40	serie 581/ 680/ 682	Article number	09 0328 65 07
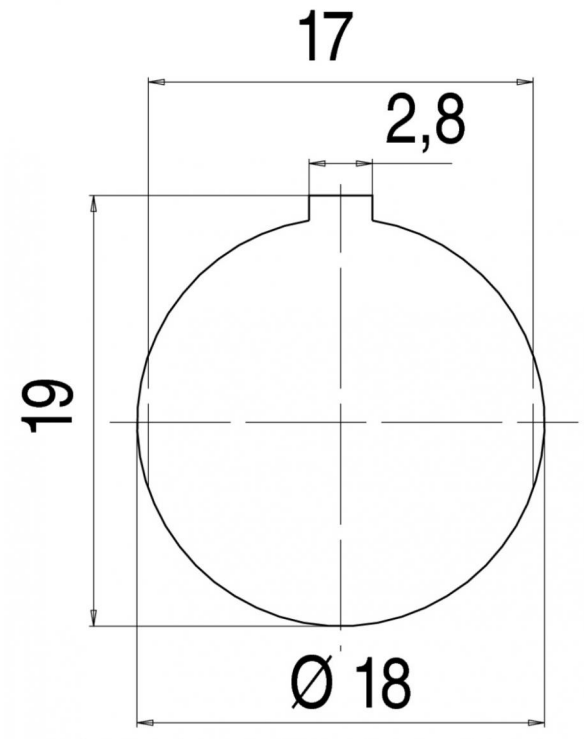
Installation instructions / Mounting cutout